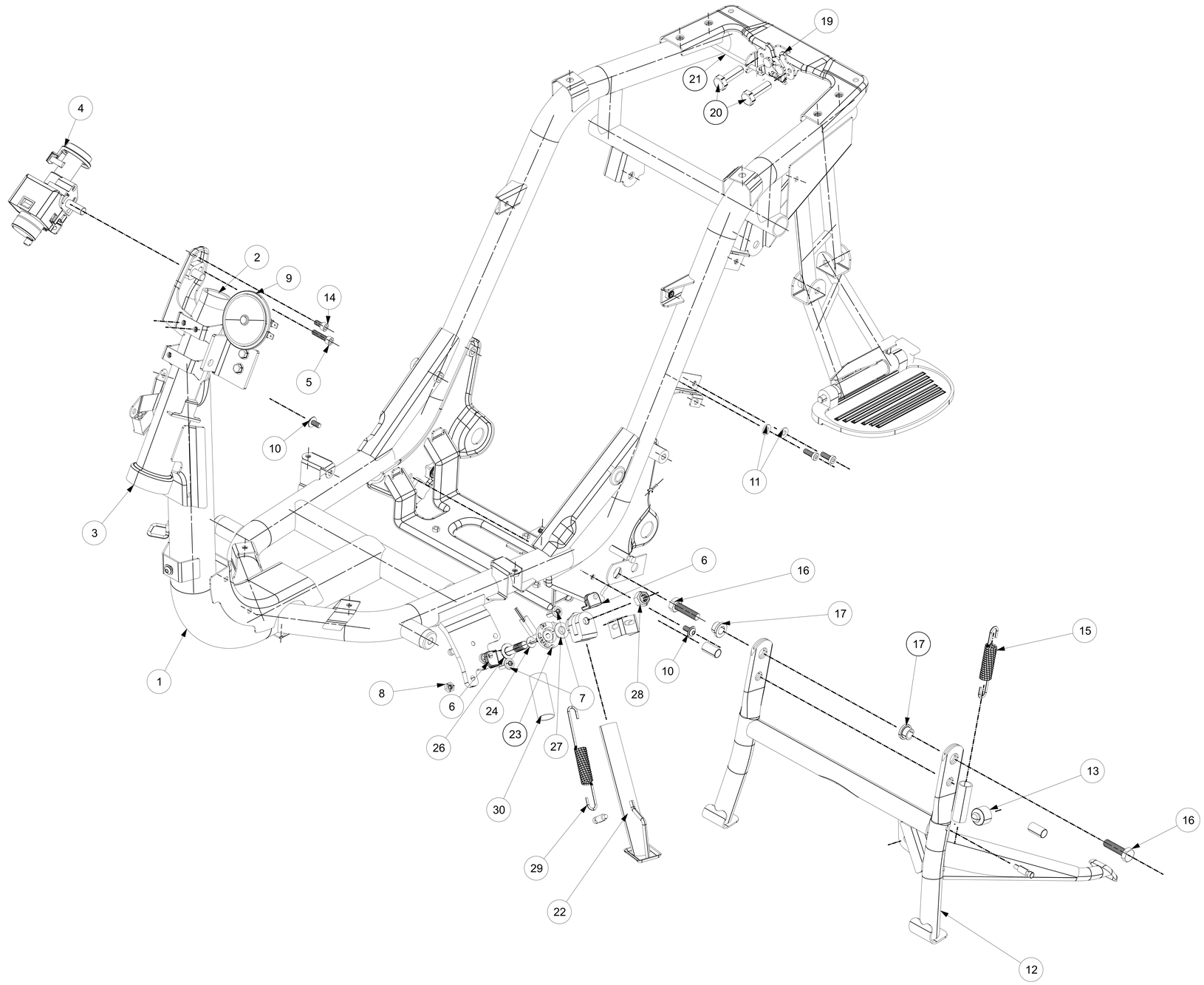FRAME ASSEMBLY